TAC SERIES

500 lbs Clutch

2,224 N Clutch



Specifications

CAPACITY	**STATIC LOAD**
500 lbs (2,224 N)	1,000 lbs (4,448 N)
TUBE RESTRAINING TORQUE	**DESIGN**
40 in-lbf (4.5 Nm)	Acme Screw
TEMPERATURE RANGE	**ENVIRONMENT**
-20°F to 120°F (-29°C to 50°C) (Special grease for low temperature)	IP50 Protection standard

Features & Benefits

- Heavy duty design for long life in tough applications
- Aluminum housing and outer tube
- Stainless steel translating tube
- Double clevis mounting
- Load limiting ball detent clutch
- Automatic reset thermal overload motor protection

Options

- Bellows boot

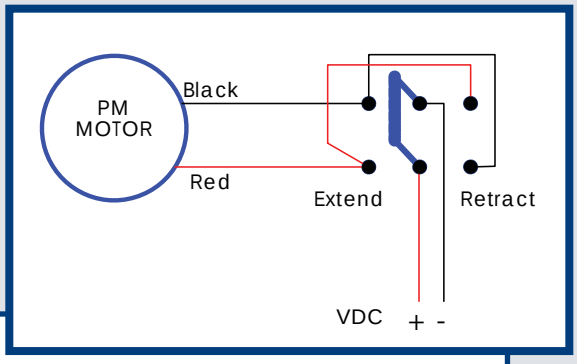

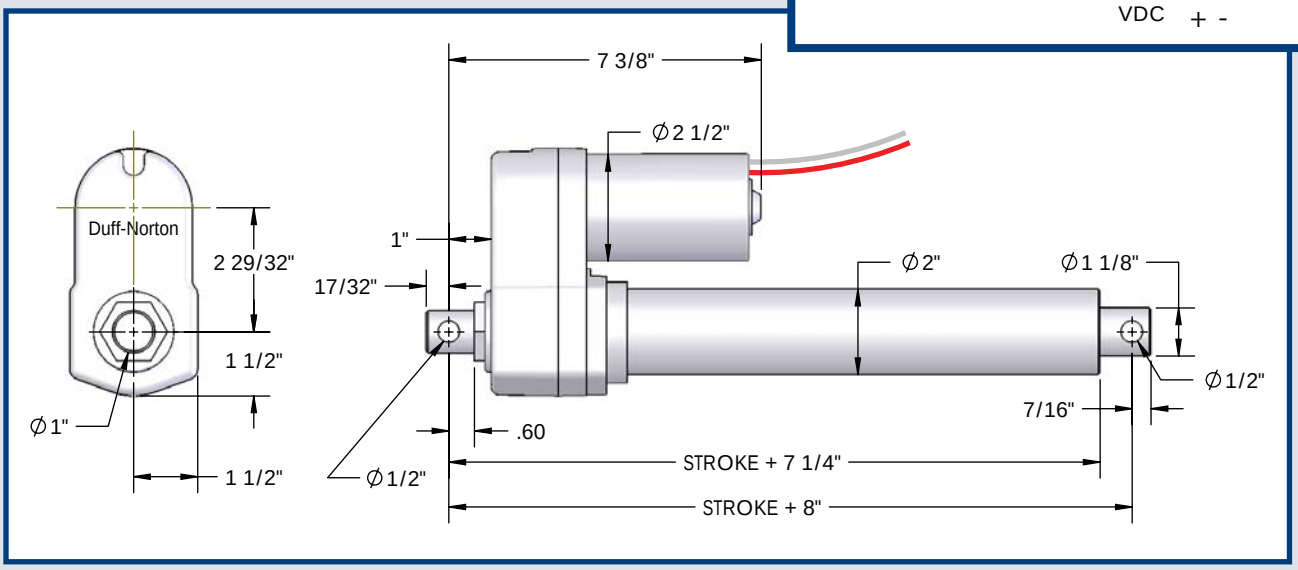

PRODUCT INFORMATION

TAC Series Clutch Model 500 lb (2,224 N) Capacity

Part Number	Rated Load		Stroke Length		Retracted Length		Voltage	Current Draw at Rated Load (A)	Speed at Rated Load		Limit Switch	Clutch	Duty Cycle at Rated Load	Weight	
	lbs	N	in	mm	in	mm	Vdc		in/s	mm/s				lbs	N
TAC05-1D20-4	500	2,224	4	101.6	12	304.8	12	10	0.45	11.4	No	Yes	40%	15	66.7
TAC05-1D20-8			8	203.2	16	406.4								16	71.1
TAC05-1D20-12			12	304.8	20	508.0								17	75.6
TAC05-2D20-4	500	2,224	4	101.6	12	304.8	24	5	0.45	11.4	No	Yes	40%	15	66.7
TAC05-2D20-8			8	203.2	16	406.4								16	71.1
TAC05-2D20-12			12	304.8	20	508.0								17	75.6